DWG. NO.
GB2-0011

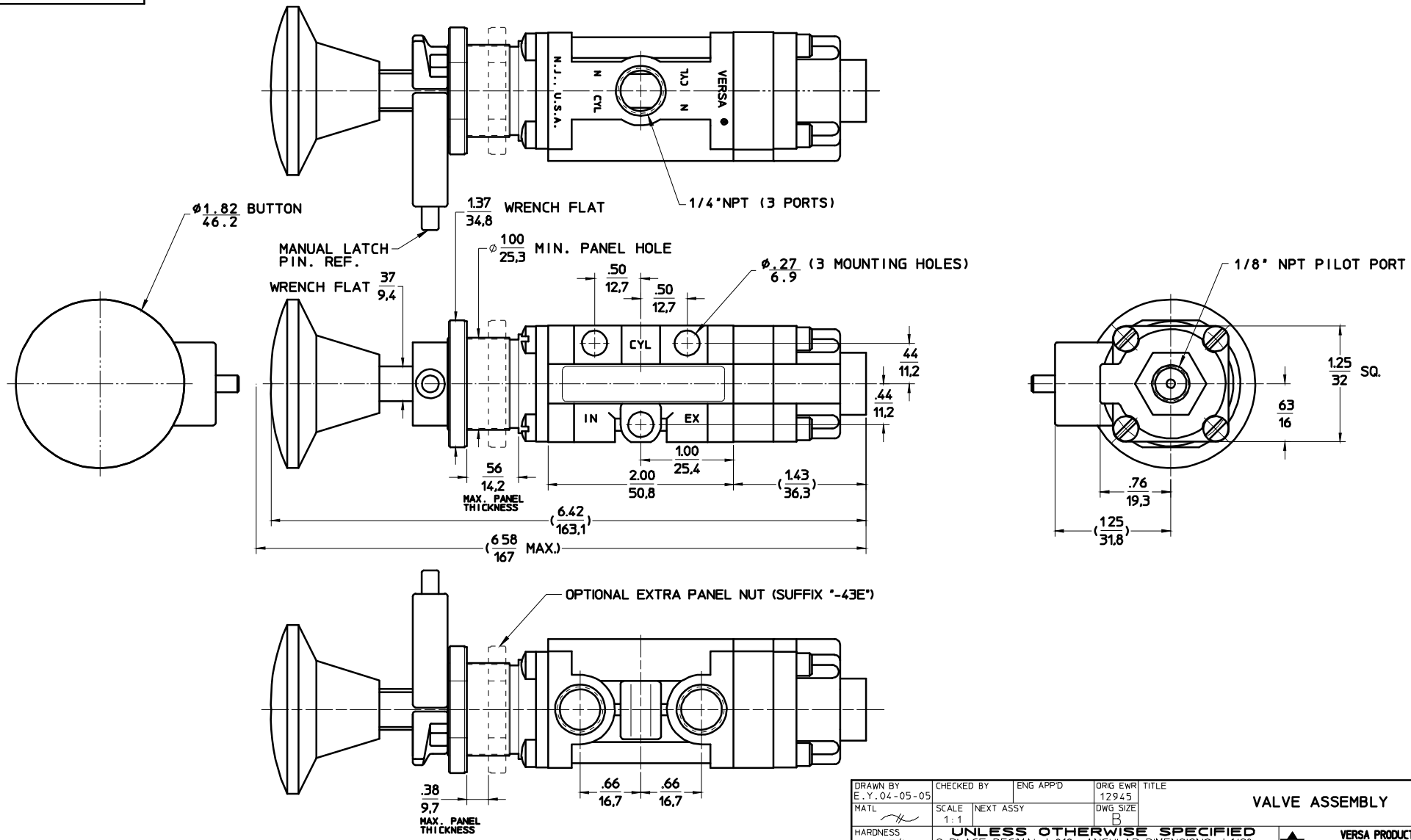


IN / mm

| LTR | REVD/CKD BY | DESCRIPTION | EWR NO/APPD BY |
|---|---|---|---|
| A | E.Y. 04-05-05 / J.C. 04-06-05 | INITIAL RELEASE | 12945 / B.N. 04-07-05 |

REVISION LEVEL

| DRAWN BY | CHECKED BY | ENG APP'D | ORIG EWR | TITLE |
|---|---|---|---|---|
| E.Y. 04-05-05 | | | 12945 | VALVE ASSEMBLY |
| MATL | SCALE 1:1 | NEXT ASSY | DWG SIZE B | |
| HARDNESS | | | | |
| HEAT TREAT | | | | |
| FINAL FINISH | | | | |

UNLESS OTHERWISE SPECIFIED
2 PLACE DECIMAL ± 010 ANGULAR DIMENSIONS ±1/2°
3 PLACE DECIMAL ± 003 BREAK CORNERS & EDGES 010
DIA'S ON SAME CENTERLINE CONCENTRIC WITHIN 006 T.I.R
MACHINED SURFACES, FINISHED TO 64 R.M.S. MAX.

DO NOT SCALE DRAWING

THIS DRAWING IS CAD GENERATED AND THE PROPERTY OF VERSA PRODUCTS CO. INC. USE AND/OR REPRODUCTION OF ANY PORTION MUST BE WITH THE APPROVAL OF VERSA

VERSA PRODUCTS CO., INC.
PARAMUS N.J.. U.S.A.
VERSA BV. NETHERLANDS

DWG. NO.
GB2-0011