# Data Sheet

**Itemnumber....: 3242800109**

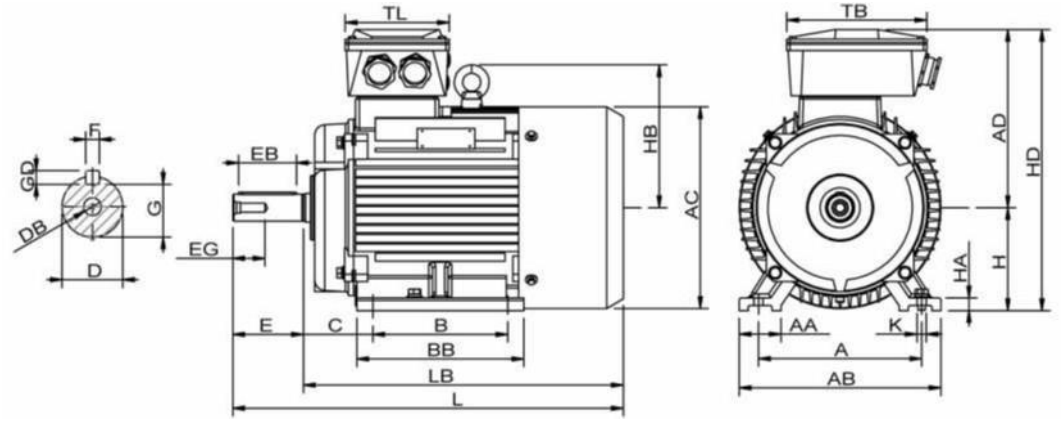


| | | | | | | | | |
|---|---|---|---|---|---|---|---|---|
| A = 457 | AC = 546 | BB = 485 | DB = M20 | EG = 56 | GD = 12 | HB = 362 | L = 985 | TL = 230 |
| AA = 85 | AD = 403 | C = 190 | E = 140 | F = 20 | H = 280 | HD = 683 | LB = 845 | |
| AB = 542 | B = 368 | D = 75 | EB = 110 | G = 67,50 | HA = 35 | K = 24 | TB = 305 | |

### Version

Type.....: HMC2 280S-4
Design.....: Induction motor
Standard series.....: IEC 60034
Phase / Voltage range.....: 3~ / Low

### Electrical design

Efficiency.....: IE2
Pole.....: 4
Power at 50 Hz (kW).....: 75,0
Hz.....: 60 (60 Hz output)
Voltage.....: 440VD 60 Hz
Winding voltage.....: 400VD/690VY 50 Hz
Power output (kW).....: 87,5
Duty.....: S1
Insulation class.....: F
Temperature rise.....: B

### Motor protection

Thermal protection main....: PTC 3x 155 dgr
Thermal protection second..: None
Space heater.....: 1x 230V
Temperature detector.....: No
SPM.....: No
IR wire.....: No
Tropical insulation.....: Yes

### Explosion protection

According to.....: None

### General

Direction of rotation.....: CW
Painting.....: RAL 9005 Gloss 10
Nameplate.....: Multivoltage + VFD
Special packing.....: No
Special requirements.....: No

### Mechanical design

Frame size.....: 280
Mounting.....: B3
Rain cap.....: No
Protection class.....: IP55
Cooling method.....: IC411/TEFC
External grounding.....: Yes
Drain hole.....: Yes
Frame material.....: Cast Iron
Material approval.....: None
Shaft.....: IEC Standard
Key.....: Closed key
Balancing.....: Half key balancing
Vibration class.....: Grade-A
Weight (kg).....: 546

### Environment condition

Ambient temp. min. (°C)..: -20
Ambient temp. max. (°C)..: 45
Altitude (mtr up to).....: 1000

### Bearing

DE Bearing.....: 6317/C3
NDE Bearing.....: 6314/C3
Fixed bearing.....: DE

### Terminal box

Tbox position.....: Top
Cable entry direction.....: Right (from DE)
Cable entry
Main.....: 2 x M63x1,5
Ø37-44mm metal
Accessory.....: 2 x M20x1,5
Metal blindcaps
Connection type.....: Delta (D)
Terminal board thread.....: 6-M10

### Test values

Rotor inertia (kgm²).....: 1,55
Noise level (dB(A)).....: 71
No load current (A).....: 39,5
Winding resist. (ohm).....: 0,087
Starting time (sec.).....: 0,21
Temp. rise winding (K).....: 68
Temp. rise surface (K).....: 60

| | | | | |
|---|---|---|---|---|
| Rated power (kW) . . . . . : | 75,0 | 73,0 | 90,0 | 86,0 |
| Frequency (Hz) . . . . . : | 50 | 50 | 60 | 60 |
| Voltage (V) . . . . . : | 400 690 | 380 660 | 480 830 | 440 |
| Connection . . . . . : | D Y | D Y | D Y | D |
| Full load current (A) . . . : | 128 74,0 | 132 76,5 | 128 74,0 | 140 |
| Speed (rpm) . . . . . : | 1480 | 1480 | 1780 | 1780 |
| Power factor cos(phi) . . . : | 0,91 | 0,91 | 0,91 | 0,91 |
| Efficiency, 100/75/50 (%) : | 94,0/94,4/95,5 | 94,0/94,4/95,5 | 94,0/94,4/95,5 | 93,6/94,0/95,1 |
| Ist/In . . . . . : | 7,6 | 6,7 | 7,6 | 7 |
| Full load torque (Nm) . . . : | 485 | 470 | 485 | 470 |
| Tst/Tn . . . . . : | 2,5 | 2,3 | 2,5 | 2,1 |
| Tmax /Tn . . . . . : | 3,4 | 3,1 | 3,4 | 2,9 |
| Duty . . . . . : | S1 | S1 | S1 | S1 |
| Ambient temp. (°C) . . . . . : | 40 | 45 | 40 | 50 |

HOYER
EXCEEDING EXPECTATIONS

Data are not binding. Hoyer reserves the right to implement changes without notice. The extent of data are not equivalent to nameplate on the motors.